Document Number: KT33771SPIUG
Rev. 2.0, 11/2016

KIT33771SPIEVB evaluation board

Featuring the MC33771 battery cell controller IC

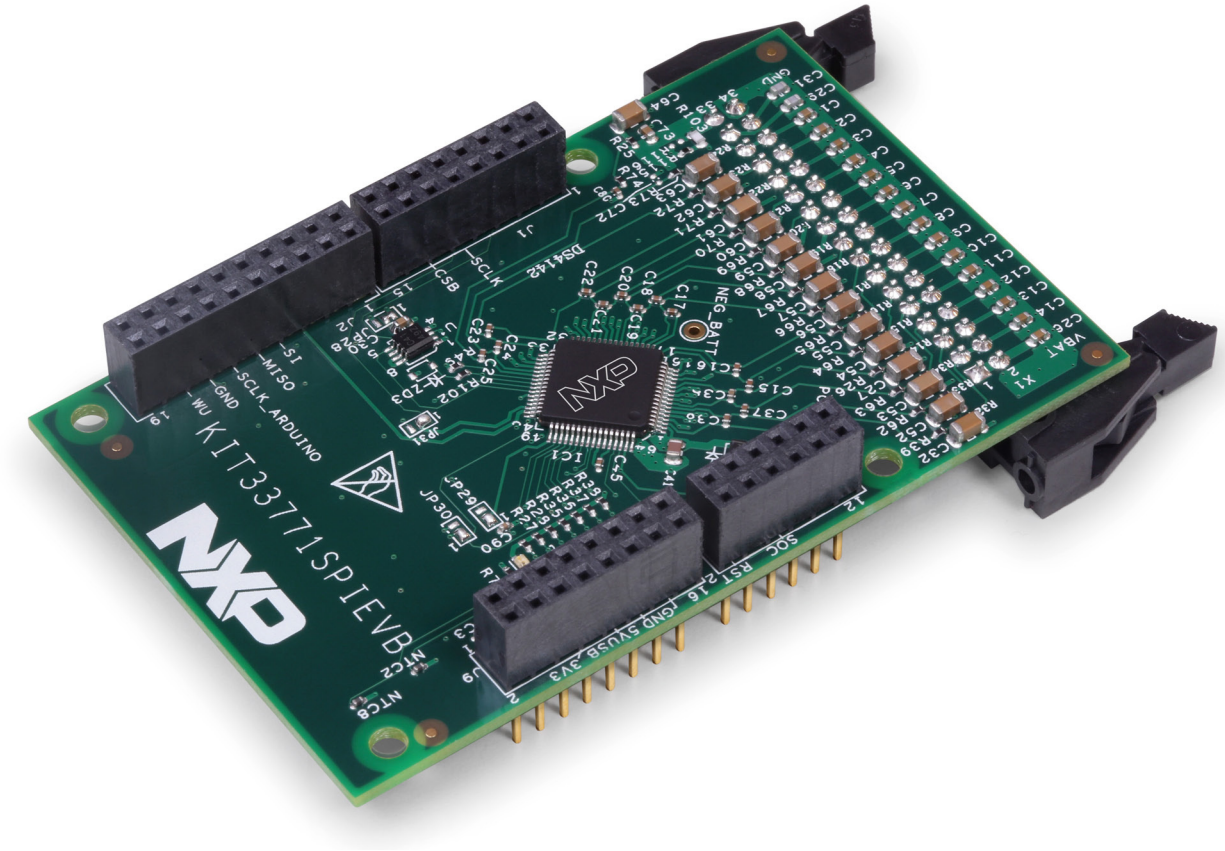

Figure 1. KIT33771SPIEVB evaluation board

© 2016 NXP B.V.

Contents

1 Getting started . . . 3
1.1 Kit contents/packing list . . . 3
1.2 Jump Start . . . 3
1.3 Required equipment and software . . . 3
2 Getting to know the hardware . . . 4
2.1 Board overview . . . 4
2.2 Board features . . . 4
2.3 Block diagram . . . 5
2.4 Device features . . . 5
2.5 Board overview . . . 6
2.6 VCOM LED . . . 7
2.7 Jumper settings . . . 8
2.8 Test point definitions . . . 9
2.9 Connectors . . . 10
2.10 External EEPROM . . . 12
2.11 Fault detection . . . 12
2.12 GPIO configuration . . . 12
2.13 Cell terminal voltage measurement . . . 13
3 Configuring the hardware . . . 14
3.1 Battery stack connection . . . 14
3.2 Isense connection . . . 15
3.3 Jumper connection . . . 17
4 Schematic . . . 18
5 Board layout . . . 19
5.1 Assembly layer top . . . 19
5.2 Assembly layer bottom . . . 20
6 Board bill of materials . . . 21
7 Accessory item bill of materials . . . 23
8 References . . . 24
8.1 Support . . . 24
8.2 Warranty . . . 24
9 Revision history . . . 25

1 Getting started

1.1 Kit contents/packing list

The **KIT33771SPIEVB** contents include:

- Assembled and tested evaluation board/module in anti-static bag
- Quick start guide

1.2 Jump Start

NXP's analog product development boards provide an easy-to-use platform for evaluating NXP products. The boards support a range of analog, mixed-signal and power solutions. They incorporate monolithic ICs and system-in-package devices that use proven high-volume SMARTMOS technology. NXP products offer longer battery life, a smaller form factor, reduced component counts, lower cost and improved performance in powering state of the art systems.

All product development boards are accompanied by a Jump Start bundle available on the board's tool summary page. Jump Start bundles offer current versions of the resources related to the board. The bundles provide everything needed to begin using the board in a design environment. To access the Jump Start bundle:

1. Go to www.nxp.com/KIT33771SPIEVB
2. Review your Tool Summary Page
3. Look for

   Jump Start Your Design

4. Download the documents, software, and other information

1.3 Required equipment and software

Items required to use this kit are:

- Power supply with a range of 10 V to 70 V and a current limit set initially to 1.0 A
- 34-pin ribbon cable
- Oscilloscope (preferably 4-channel)

2 Getting to know the hardware

2.1 Board overview

The KIT33771SPIEVB is a hardware evaluation tool supporting system designs based on NXP's MC33771 device. The MC33771 is a battery cell controller that accommodates up to fourteen lithium-ion batteries. It is designed for use in both automotive and industrial applications. The device performs ADC conversion on differential cell voltages and currents. It is also capable of battery charge coulomb counting and battery temperature measurements.The KIT33771SPIEVB evaluation board is an ideal platform for rapid prototyping of MC33771-based applications that involve current, voltage, and temperature sensing.

The KIT33771SPIEVB includes a configurable buffer IC and four connectors that interface SPI signals with a FRDM–KL25Z board or any other Arduino™ compatible MCU board. The evaluation board allows the selection of either +3.3 V or +5.0 V SPI signals to be compatible with the I/O voltage requirements of the MCU.

2.2 Board features

The main features of the KIT33771SPIEVB evaluation board are:

- LED indicator for operation mode
- Cell-balancing resistor
- Cell sense input with RC filter
- GPIO: digital I/O, wake-up inputs, convert trigger inputs, ratiometric analog inputs, analog inputs with absolute measurements
- Interface I²C link to an external local EEPROM to store user-defined calibration parameters
- Fault detection pin report
- Four connectors for SPI communication with FRDM–KL25Z boards or other Arduino compatible Freedom boards
- Selection of either +5.0 V or +3.3 V for SPI output signals (depending on MCU voltage requirements)

2.3 Block diagram

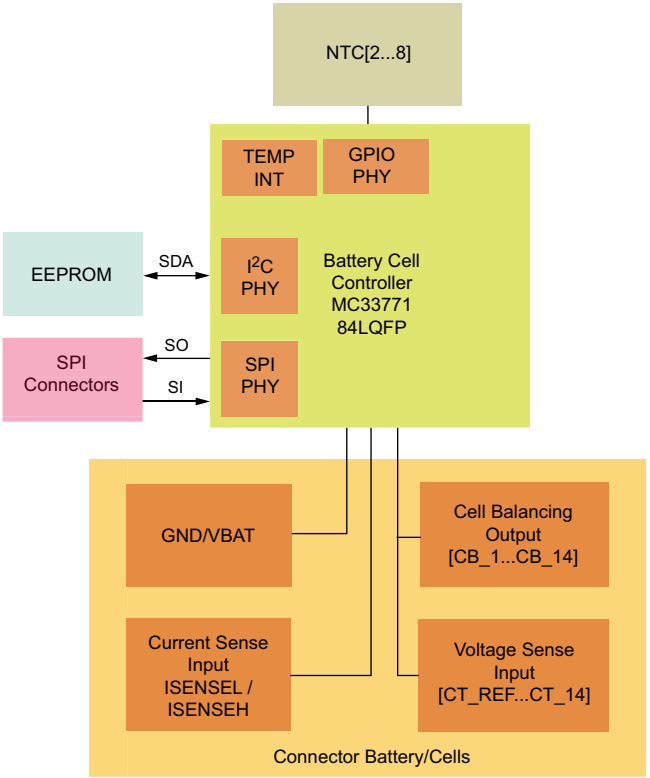

Figure 2. Block diagram

2.4 Device features

The MC33771 is a battery cell controller IC designed to monitor battery characteristics, such as voltage, current, and temperature. The MC33771 contains all the circuit blocks necessary to perform synchronous battery voltage/current measurement, coulomb counting, cell temperature measurement, and integrated cell balancing. The device supports the following functions:

Table 1. MC33771 features

Device	Description	Features
MC33771	Battery cell controller	• 9.6 V VPWR, 61.6 V operation, 70 V transient • SPI or isolated 2.0 MHz differential communication • Synchronized cell voltage/current measurement with coulomb count • Total stack voltage measurement • Seven ADC/GPIO/temperature sensor inputs • Addressable on initialization • 5.0 V at 5.0 mA reference supply output • Integrated sleep mode over/undervoltage and temperature monitoring • Over/undervoltage, over/undertemperature fault verification • Onboard 300 mA passive cell balancing with diagnostics • Open cell pin detection • Internal diagnostics • Hot plug capable • Operational low-power mode

2.5 Board overview

The KIT33771SPIEVB circuit board provides design support for all the functions of the MC33771 battery controller cell.

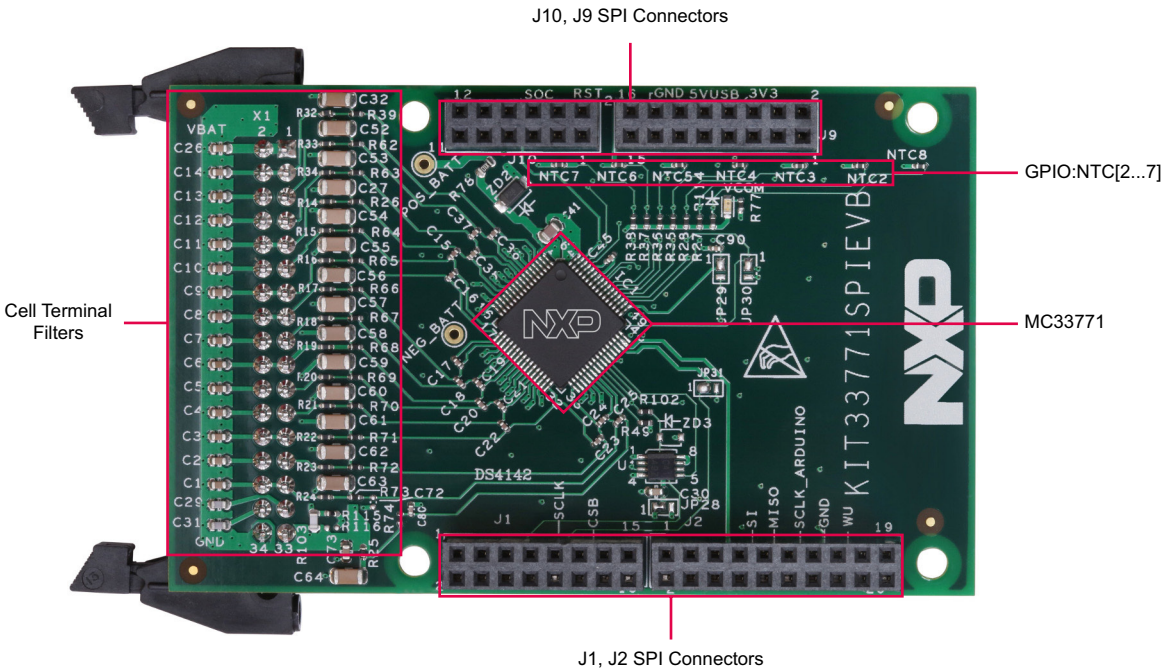

Figure 3. Board description

Table 2. Board description

Name	Description
MC33771	Battery cell controller IC
Cell terminal filters	Connection to battery cells through low pass filters
GPIO:NTC[2...8]	Interface for digital I/O, wake-up inputs, convert trigger inputs, ratiometric analog inputs, analog inputs with absolute measurements
J1, J2, J9, J10	Connectors to plug EVB onto FRDM–KL25Z or other Arduino™ compatible MCU board

2.6 VCOM LED

The VCOM LED is located on the board as shown in Figure 4.

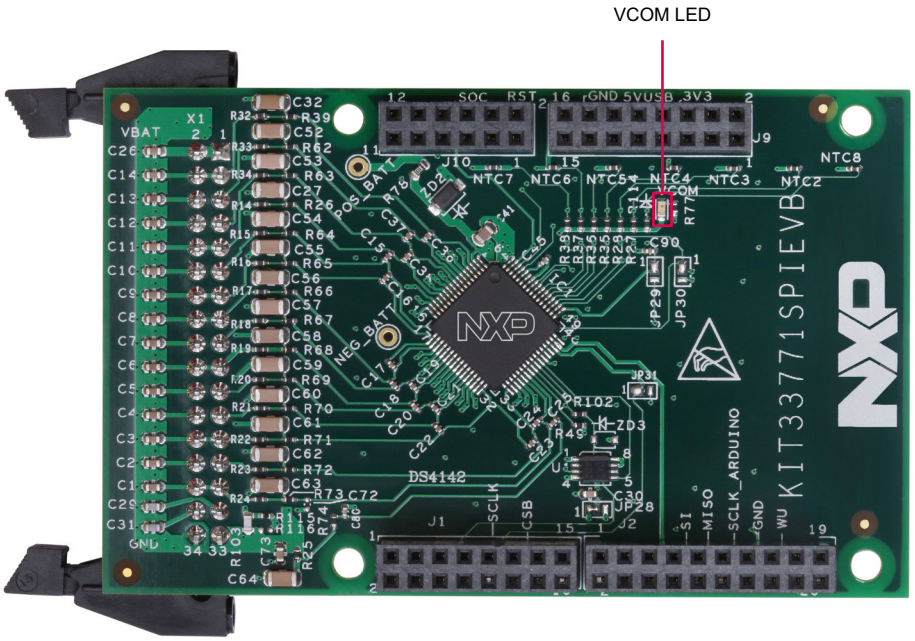

Figure 4. VCOM LED

The VCOM LED indicates when the device is in normal mode. Upon reset, the MC33771 enters into normal mode (VCOM lights). If there is no activity on the bus after a timeout period of 60 seconds, the device enters low-power idle mode (VCOM turns off). If no communication occurs on the TPL bus within one second of device initialization, the device switches to sleep mode and the LED turns off (VCOM off). Depending on the device settings, the VCOM LED may flash every second during cyclic acquisition.

2.7 Jumper settings

Four hand soldered jumpers—JP28 to JP31—support various configurations. See Table 3.

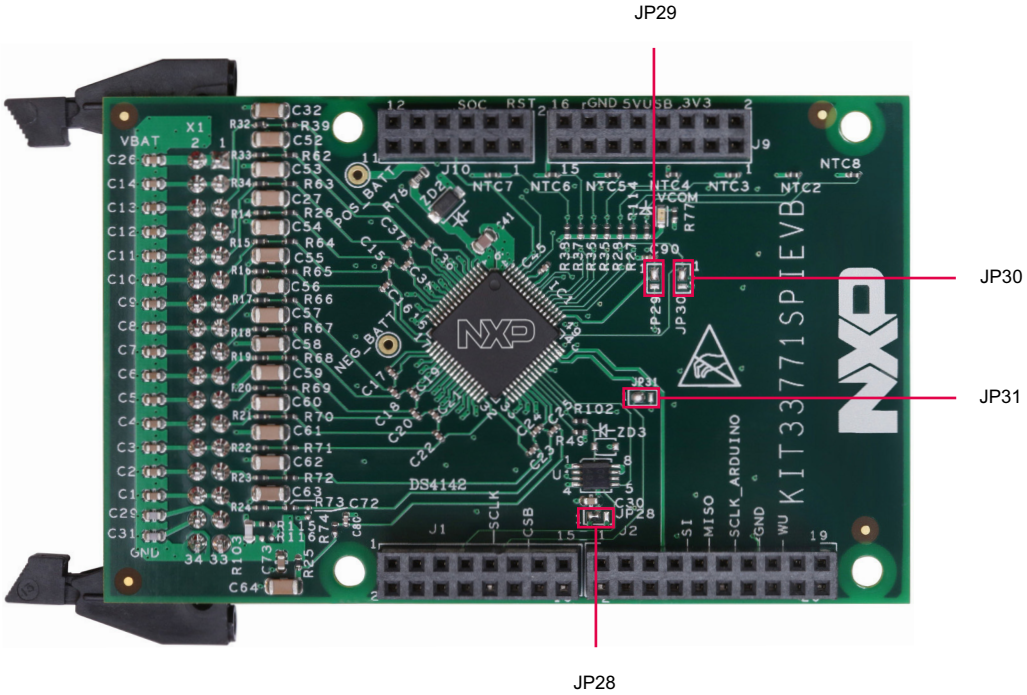

Figure 5. Jumpers

Table 3. Jumper settings

Jumper	Description	Setting	Connection
JP28	SPI output voltage	1-2	3.3 V
		2-3	5.0 V
JP29	GPIO0 function selection	1-2	Connection to on-board NTC
		2-3	For GPIO WU function: connected to J2_18
JP30	GPIO2 function selection	1-2	Connection to on-board NTC
		2-3	For GPIO SOC function: connected to J2_10
JP31	SCLK connection	1–2	KL25Z compatible: connected to J1_9
		2–3	Arduino™ compatible: connected to J2_12

2.8 Test point definitions

Figure 6 shows the location of the test points on the board.

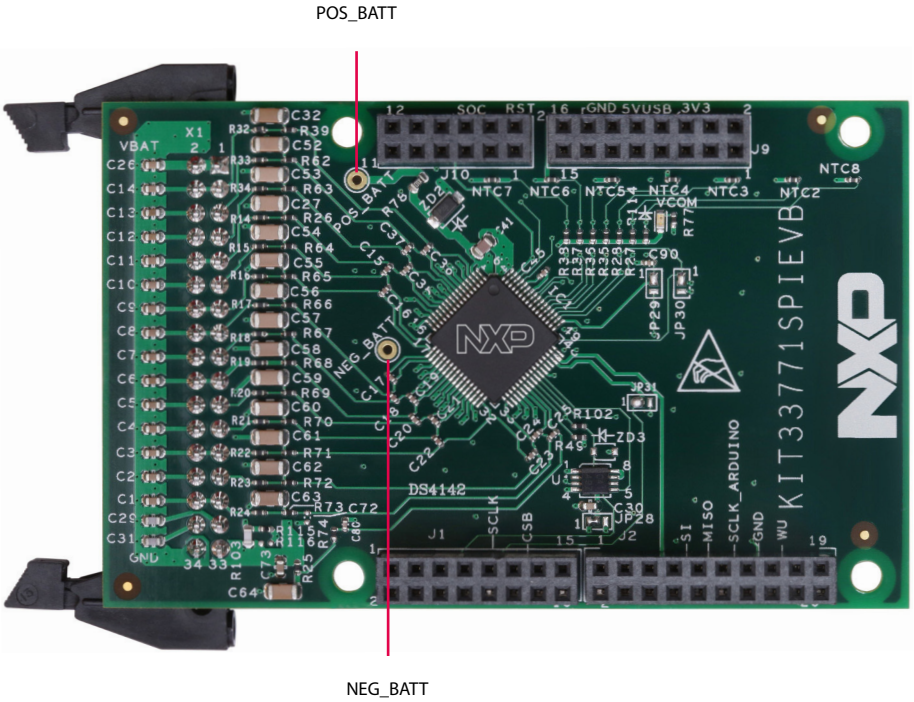

Figure 6. Test points

The following test points provide access to various signals to and from the board.

Table 4. Test points

Test point name	Signal name	Description
NEG_BATT	GNDREF	Ground reference of the device
POS_BATT	V_{BAT}	Positive V_{BAT}

2.9 Connectors

Figure 7 shows the location of connectors on the board. Table 5 and Table 6 list the pinouts for each connector.

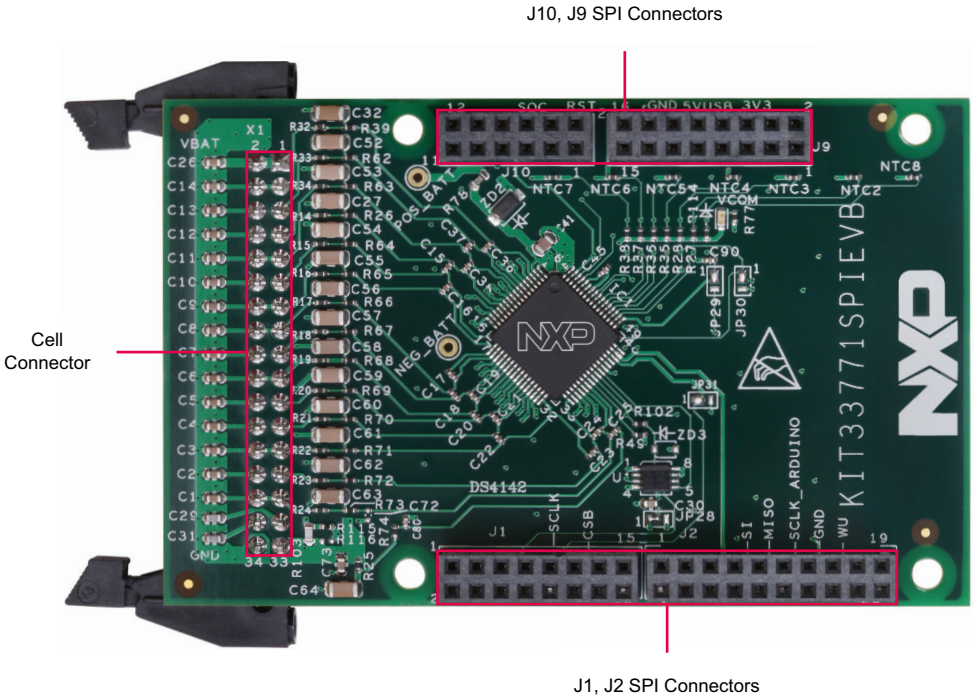

Figure 7. Connectors

2.9.1 SPI connectors configurations

Table 5. SPI pin configurations

Pin number	Connection	Description
J1_6	FAULT	Fault output
J1-9	SCLK_25Z	SPI clock in KL25Z compatibility mode (see jumper configurations)
J1_14	CSB	SPI chip select
J2_8	SI	SPI serial input
J2-10	SO	SPI serial output
J2_12	SCLK_ARDUINO	SPI clock in Arduino™ compatibility mode (see jumper configurations)
J2_14	GND	Ground
J2_18	GPIO_WU	Logic input connected to GPIO0 pin (see jumper configurations)
J9_12	GND	Ground
J9_14	GND	Ground
J9_10	+5.0 V	+5.0 V from Freedom board
J9_8	+3V3	+3.3 V from Freedom board
J10_2	RESET	RESET is an active high input. RESET has an internal pull-down
J10_6	GPIO2_SOC	Logic input connected to GPIO2 pin (see jumper configurations)

2.9.2 Battery cells connector

To connect the fourteen battery cells, the board is using a header latch / eject 34-Pin: [X1-1...X1-34] (see Table 6).

Table 6. Battery cells connector

Pin number	Connection	Description
X1-1 X1-2	VBAT	MC33771 Power supply
X1-3 X1-4	CT_14 CB_14	Cell pin 14 input with external LPF resistor Cell balance driver. Terminate to cell 14 cell balance load resistor
X1-5 X1-6	CT_13 CB_14:13_	Cell pin 13 input with external LPF resistor Cell balance 14:13 common. Terminate to cell 14 and 13 common pin
X1-7 X1-8	CT_12 CB_13 / CB_12	Cell pin 12 input with external LPF resistor Cell balance driver. Terminate to cell 13 and 12 cell balance load resistor
X1-9 X1-10	CT_11 CB_12:11_C	Cell pin 11 input with external LPF resistor Cell balance 12:11 common. Terminate to cell 12 and 11 common pin
X1-11 X1-12	CT_10 CB_11 / CB_10	Cell pin 10 input with external LPF resistor Cell balance driver. Terminate to cell 11 and 10 cell balance load resistor
X1-13 X1-14	CT_9 CB_10:9_C	Cell pin 9 input with external LPF resistor Cell balance 10:9 common. Terminate to cell 10 and 9 common pin
X1-15 X1-16	CT_8 CB_9 / CB_8	Cell pin 8 input with external LPF resistor Cell balance driver. Terminate to cell 9 and 8 cell balance load resistor
X1-17 X1-18	CT_7 CB_8:7_C	Cell pin 7 input with external LPF resistor Cell balance 8:7 common. Terminate to cell 8 and 7 common pin
X1-19 X1-20	CT_6 CB_7 / CB_6	Cell pin 6 input with external LPF resistor Cell balance driver. Terminate to cell 7 and 6 cell balance load resistor
X1-21 X1-22	CT_5 CB_6:5_C	Cell pin 5 input with external LPF resistor Cell balance 6:5 common. Terminate to cell 6 and 5 common pin
X1-23 X1-24	CT_4 CB_5 / CB_4	Cell pin 4 input with external LPF resistor Cell balance driver. Terminate to cell 5 and 4 cell balance load resistor
X1-25 X1-26	CT_3 CB_4:3_C	Cell pin 3 input with external LPF resistor Cell balance 4:3 common. Terminate to cell 4 and 3 common pin
X1-27 X1-28	CT_2 CB_3 / CB_2	Cell pin 2 input with external LPF resistor Cell balance driver. Terminate to cell 3 and 2 cell balance load resistor
X1-29 X1-30	CT_1 CB_2:1_C	Cell pin 1 input with external LPF resistor Cell balance 2:1 common. Terminate to cell 2 and 1 common pin
X1-31	ISENSE_+	Current measurement input+ with external filter RC
X1-32	ISENSE_--	Current measurement input– with external filter RC
X1-33	CT_REF	Cell pin REF input with external LPF resistor
X1-34	GND CB_1	negative_battery Cell balance driver. Terminate to cell 1 cell balance load resistor

2.10 External EEPROM

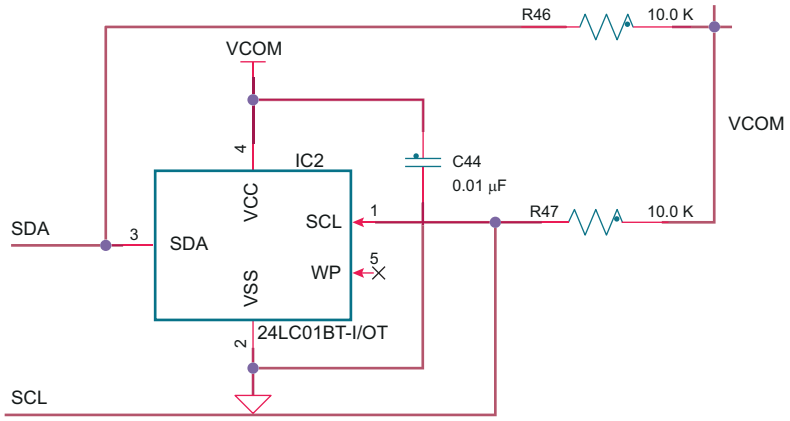

Figure 8. External EEPROM

The KIT33771SPIEVB has an integrated gateway communication link to an external local EEPROM. In high-voltage isolated applications, the MC33771's I²C communication interface manages communication with the EEPROM.

After a reset, the device automatically loads the EEPROM calibration parameters into the MC33771 registers.

2.11 Fault detection

The KIT33771SPIEVB provides a logic signal (5.0 V or 3.3 V) to detect a fault dependent on user defined internal or external faults. This signal is available on J1_6

2.12 GPIO configuration

The KIT33771SPIEVB offers seven customizable GPIOs [GPIO_0...GPIO_6] for measuring external temperature with a bridge divider. [GPIO_0] can be used as the input for wake-up or fault daisy chain.

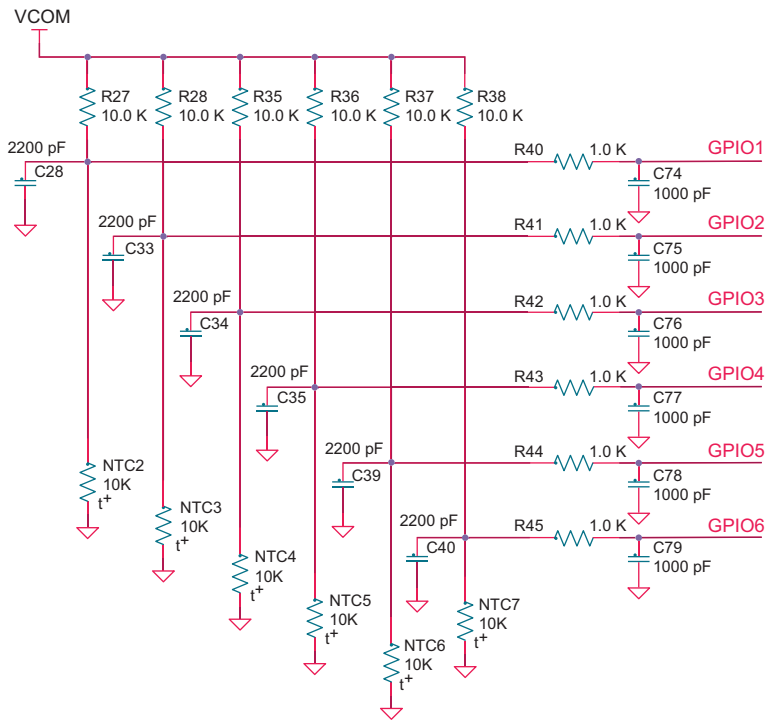

Figure 9. External temperature sensing

2.13 Cell terminal voltage measurement

The differential measurement of each cell terminal input is designed to function in conjunction with an external anti-aliasing filter with a corner frequency.

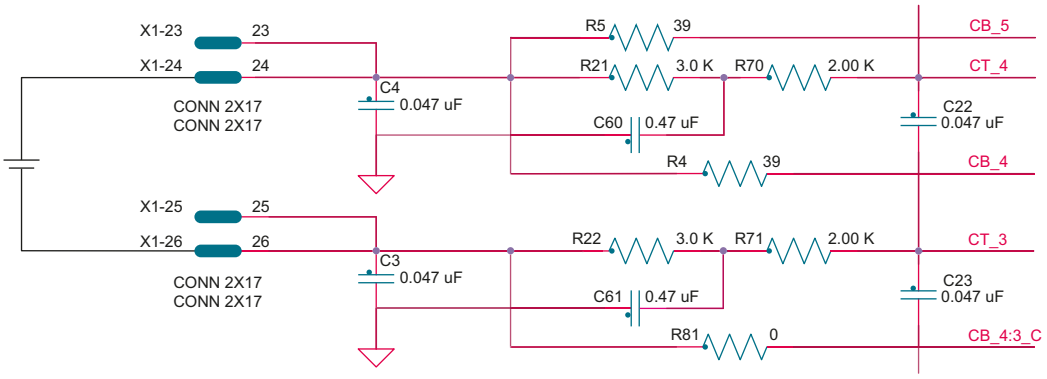

Figure 10. Cell sensing filter

3 Configuring the hardware

3.1 Battery stack connection

The KIT33771SPIEVB monitors a minimum of eight and a maximum of fourteen battery cells. The NXP battery pack (BAT-14AAAPACK) shown in Figure 11 is designed to be a companion accessory for use with the KIT33771SPIEVB. The battery pack is available at: www.nxp.com/BATT-14AAAPAK.

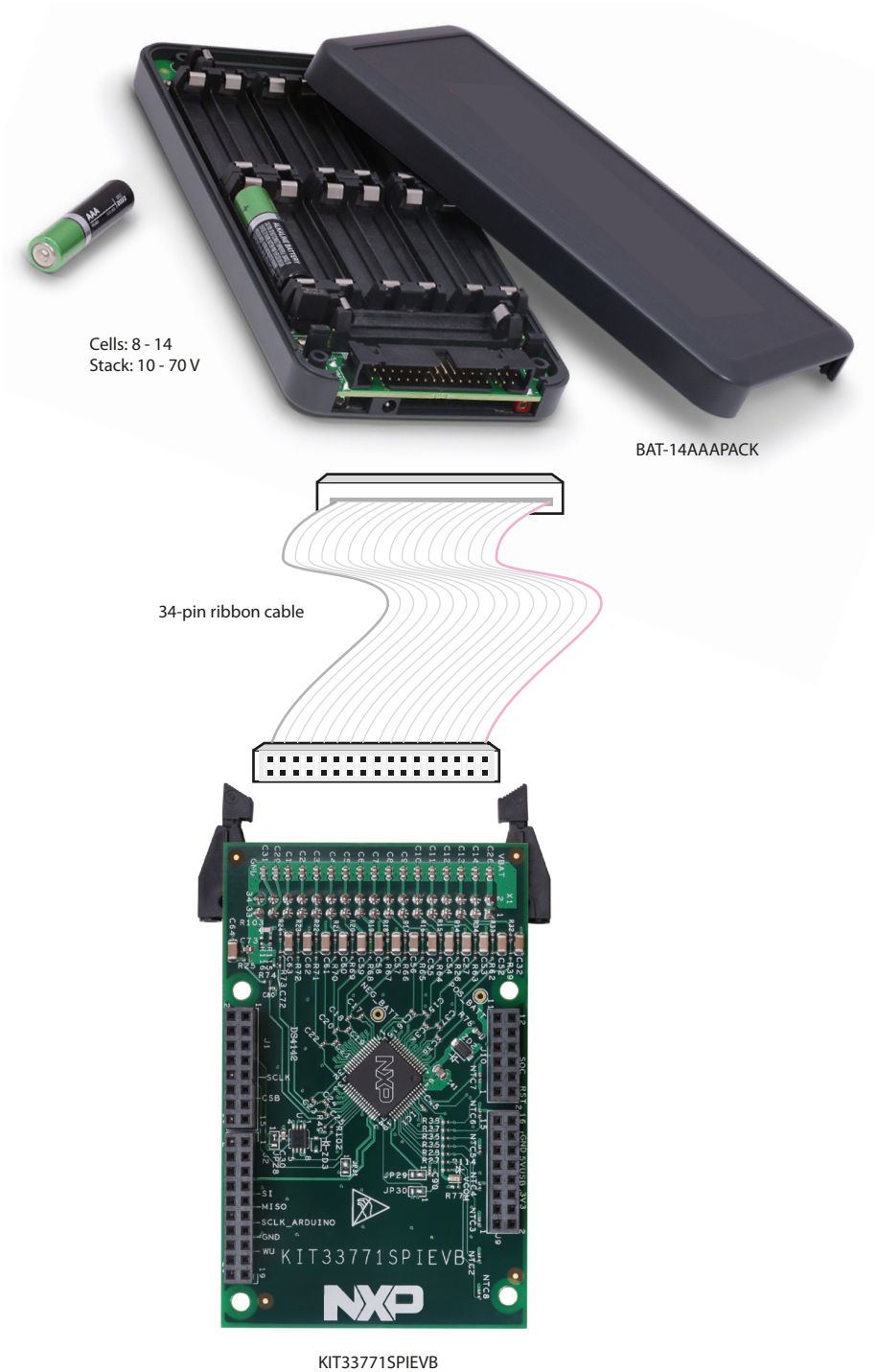

Figure 11. Battery stack connection

3.2 Isense connection

The KIT33771SPIEVB provides a 0.1 Ω shunt resistor for measuring current during demonstrations. The embedded shunt can be disconnected and an external shunt used in its place for current measurement.

3.2.1 Using the embedded 0.1 Ω shunt (default configuration)

The current should be limited to ±500 mA to avoid any damage to the EVB.

3.2.1.1 Configuration 1: Measuring both external load and KIT33771SPIEVB currents (default configuration).

To measure both currents:

1. Make sure that R109, R110, R111 (0.1 Ω shunt) and R115 are populated and that R116 is not placed (see Figure 12).
2. Connect the battery stack to the X1-1 to X1-4 connector pins (positive) and the X1-33 connector pins (negative). The current is considered negative.
3. For optional external loads, connect the negative side of the external load to the X1-34 connector pins. In this case, both currents are added.

3.2.1.2 Configuration 2: Measuring an external load current only

To measure the external load current only:

1. Make sure that R109, R110, R111, and R116 are populated and R115 is not placed.
2. Connect the battery stack to the X1-1 to X1-4 connector pins (positive) and the X1-33 connector pin (negative).
3. Connect the load negative side to the X1-32 connector pin.

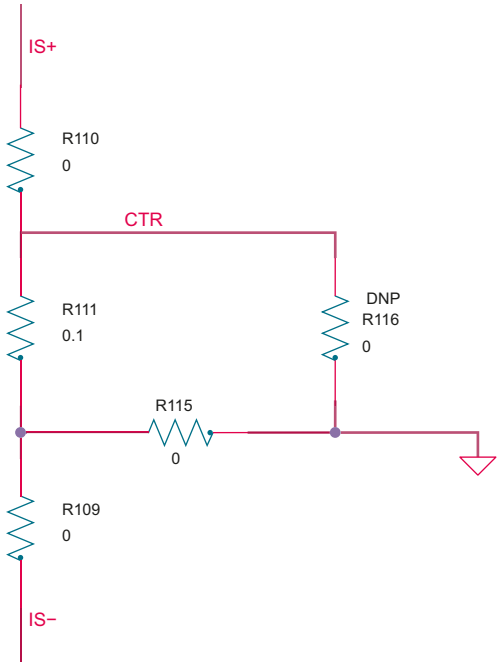

Figure 12. Resistor configuration

3.2.2 Connecting an external shunt (disconnecting the embedded shunt)

To connect an external shunt, disconnect the embedded shunt by removing resistors R109, R110, R111, R115, and R116.

3.2.2.1 Configuration 1: Measuring both external loads and KIT33771SPIEVB currents (default configuration)

Figure 13 illustrates the connections required to measure both external load currents and KIT33771SPIEVB loads.

1. Connect the positive side of the battery stack to the X1-1 to X1-4 pins. Connect the negative side of the battery stack to the X1-33 and the X1-31 pins.
2. Connect one side of the external shunt to the X1-33 and X1-31 pins. Connect the other side to X1-34 and X1-32 pins.

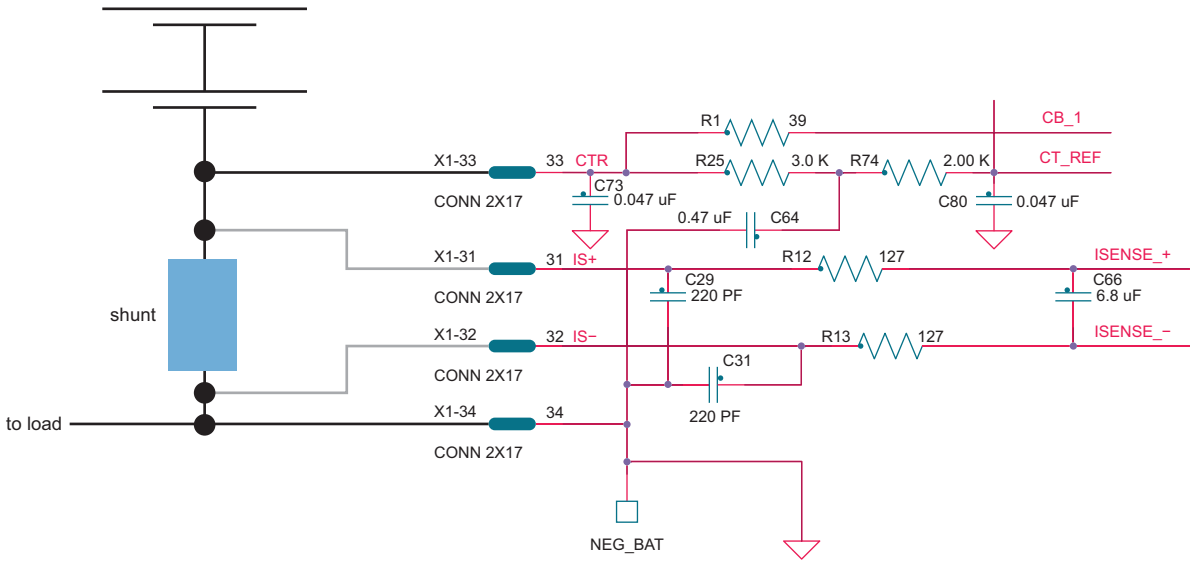

Figure 13. ISENSE connection

3.2.2.2 Configuration 2: Measuring an external load current only

Figure 14 illustrates the connections required to measure an external load current only.

1. Connect the positive side of the battery stack to the X1-1 to X1-4 pins. Connect the negative side of the battery stack to the X1-33 and the X1-34 pins.
2. Connect one side of the external shunt to the load and to X1-31 (Isense+). Connect the other side of the external shunt to X1-34 (EVB neg) and X1-32 (Isense─).

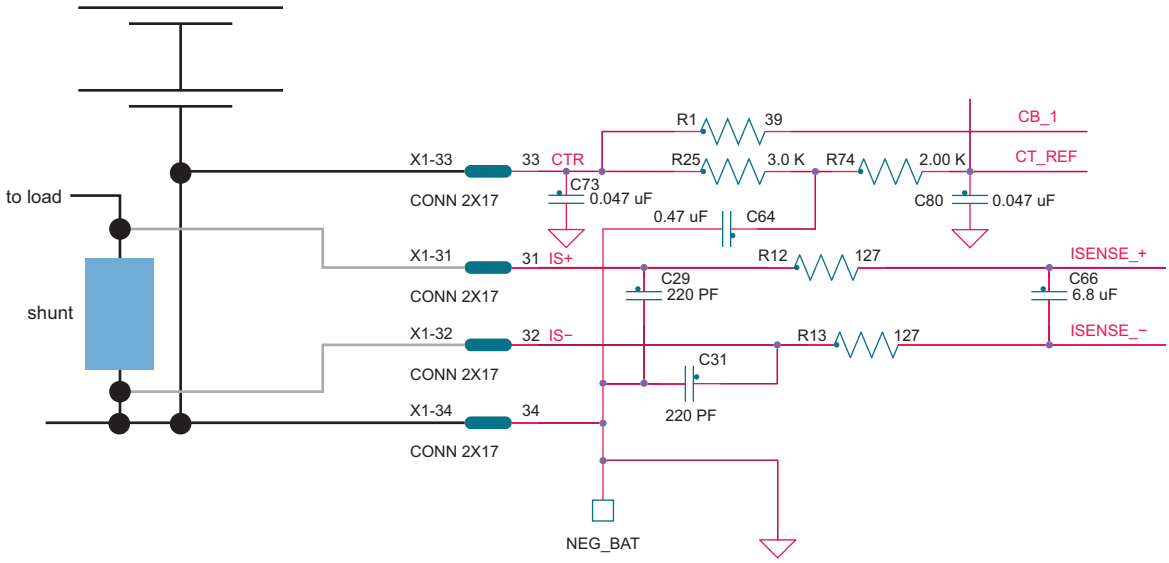

Figure 14. ISENSE connection for an external load

3.3 Jumper connection

One hand-soldered jumper (JP31) on the EVB sets the GPIO0 pin input. In position 1-2 (default), the NTC (NTC1) is connected to the GPIO0 pin of the MC33771. This input can be used as analog input. If the jumper is placed in position 2-3, the GPIO0 can be used as fault input for the fault daisy chain function.

4 Schematic

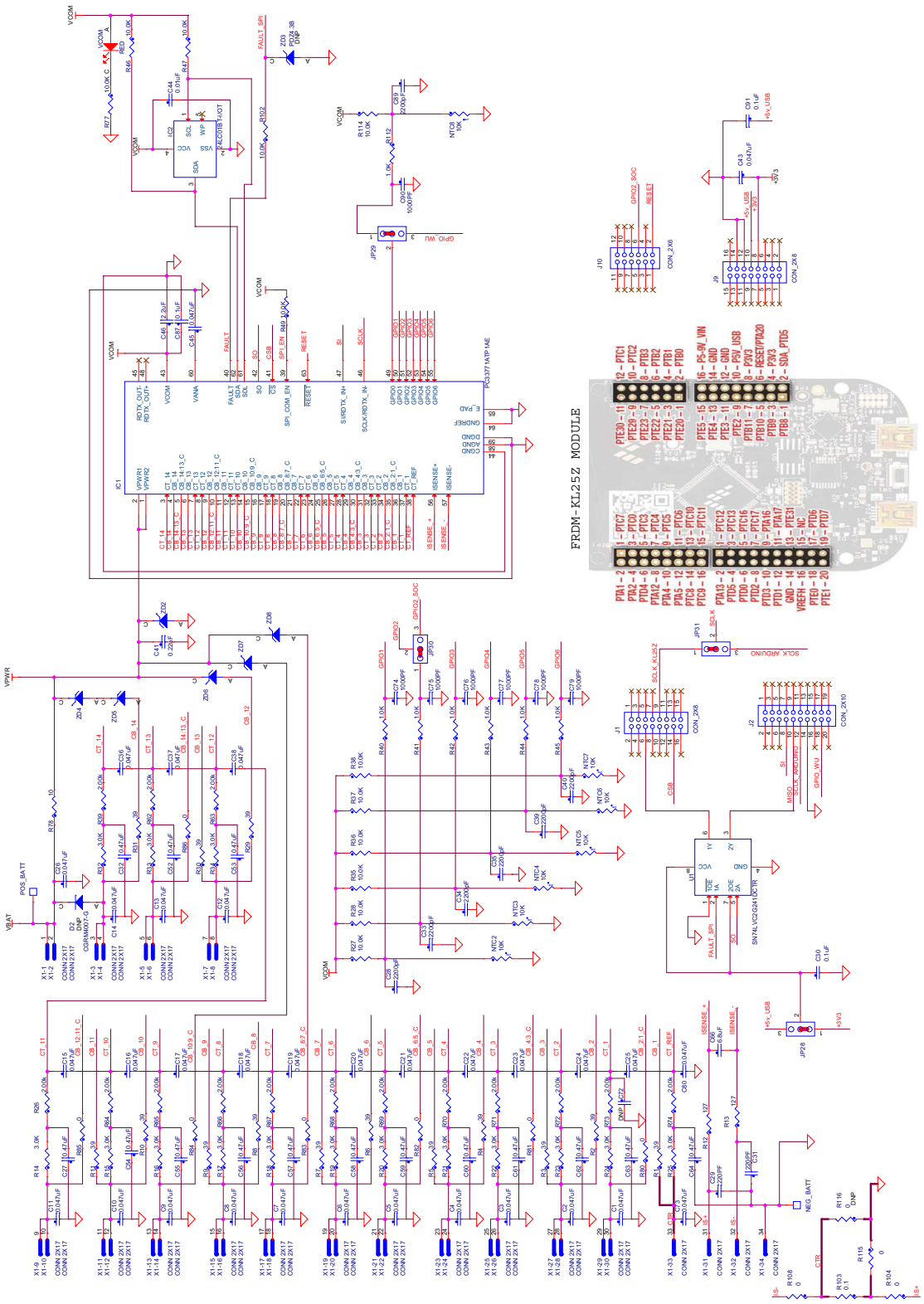

Figure 15. Evaluation board schematic

5 Board layout

5.1 Assembly layer top

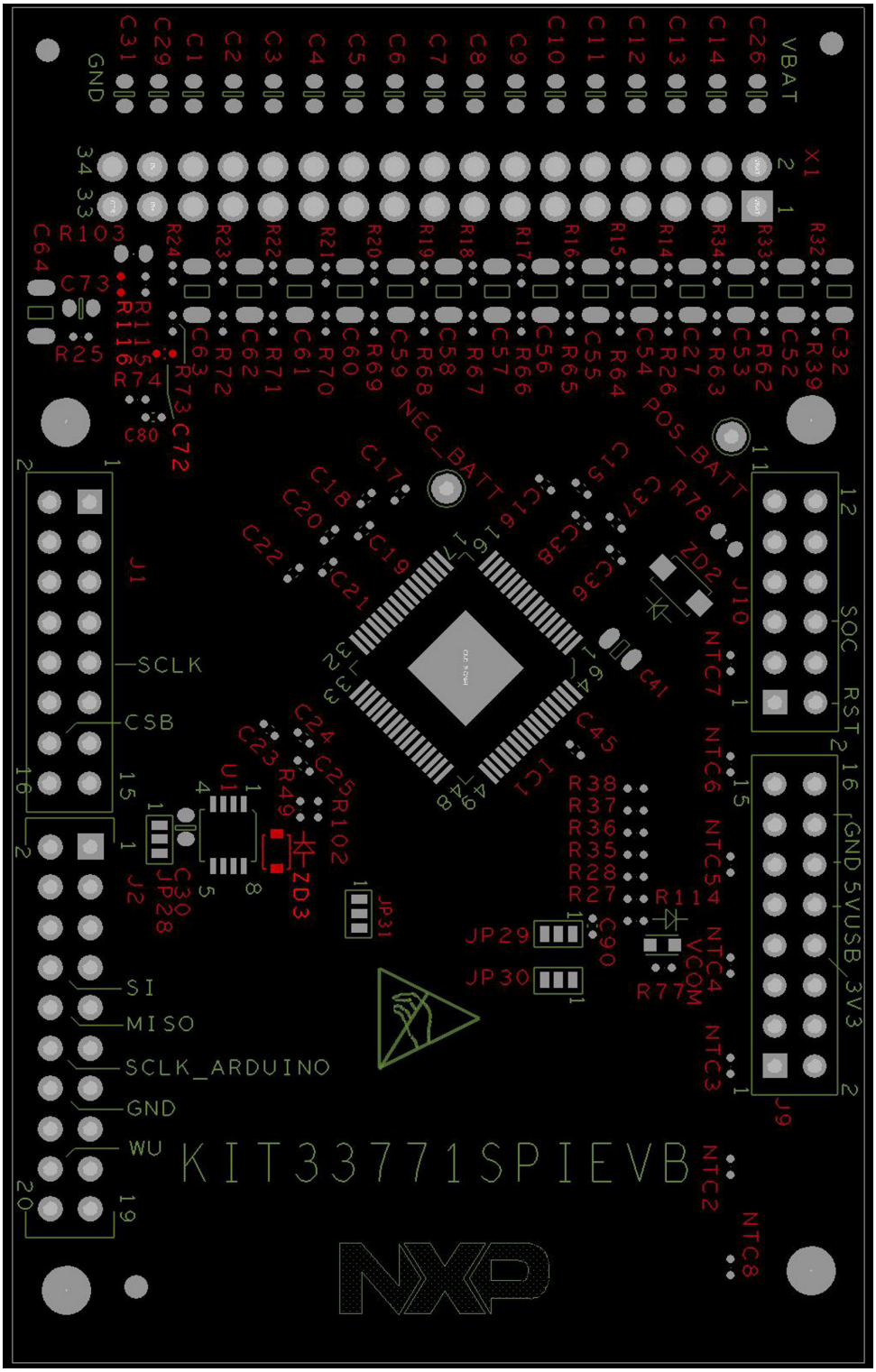

Figure 16. Assembly layer top

5.2 Assembly layer bottom

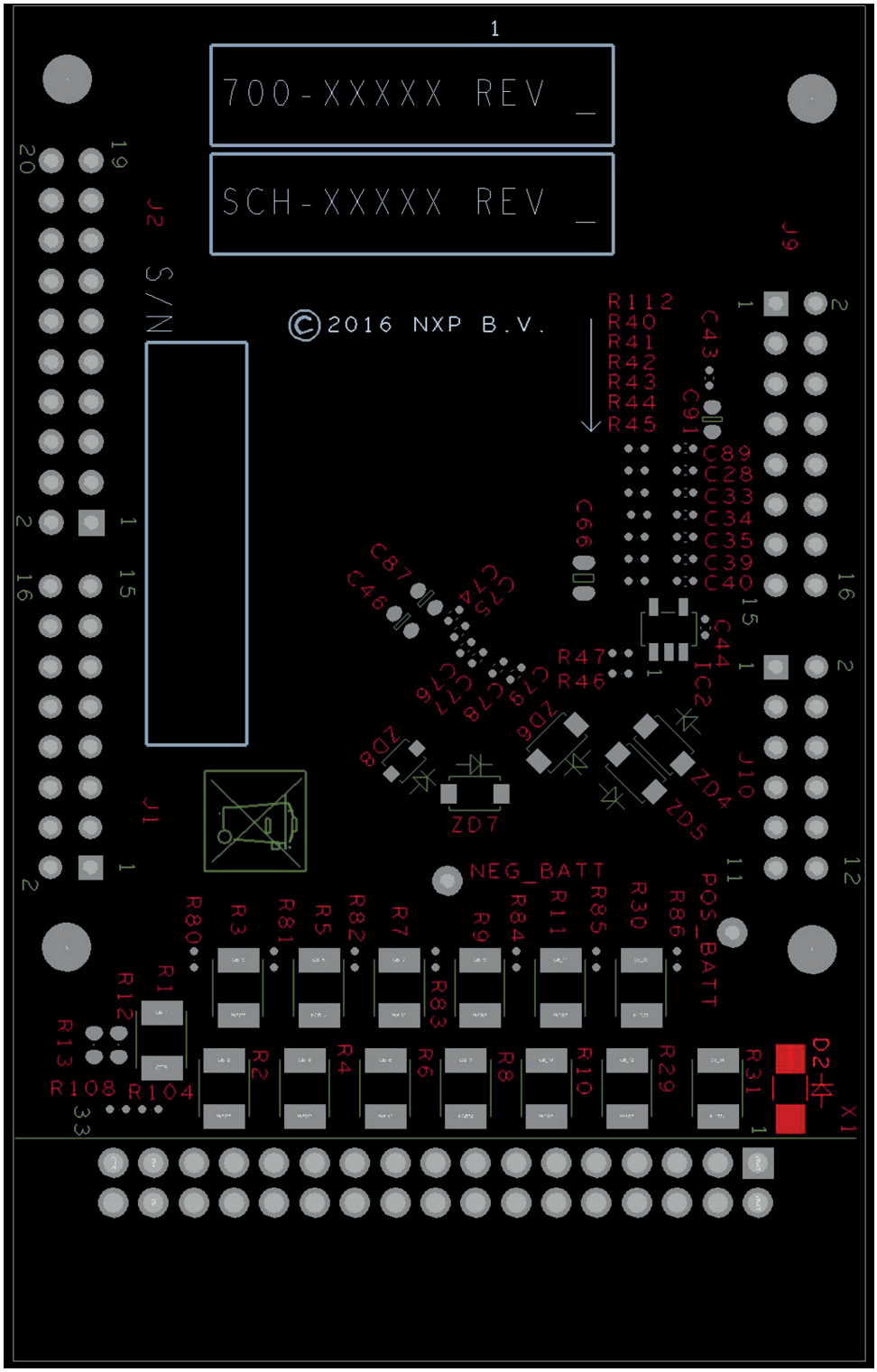

Figure 17. Assembly layer bottom

6 Board bill of materials

Table 7. Bill of materials [(1)]

Item	Qty	Schematic label	Value	Part number	Description	Assy opt.
NXP components						
1	1	IC1		MC33771ASP1AE	Battery cell controller 64 LQFP	
Active components						
2	1	IC2		24LC01BT-I/OT	Serial EEPROM SOT23-5L	
3	1	U1		SN74LVC2G241DCTR	Dual buffer/driver with 3-state outputs	
Diodes						
4	1	D2	1000 V	CGRM4007-G	Diode general purpose 1 kV 1 A SOD123	(2)
5	1	ZD1	4.7 V	BZX84C4V7-E3-08	Zener diode 4.7 V SOT23	
6	1	ZD2	75 V	MMSZ5267BT1G	Zener diode 75 V SOD123	
7	2	ZD3, ZD6	8.2 V	MMSZ5237BT1G	Zener diode 8.2 V SOD123	
8	1	ZD4	20 V	MMSZ5250BT1G	Zener diode 20 V SOD123	
9	1	ZD5	33 V	MMSZ5257BT1G	Zener diode 33 V SOD123	
10	1	ZD9	43 V	MMSZ5260BT1G	Zener diode 43 V SOD123	
11	4	Z1, Z2, Z3, Z4	10 V TVS	TPD1E10B09DPYT	IC ESD protection 0402	
LEDs						
12	1	VCOM LED		SML-311UTT86	LED 630nm red LED0603	
Capacitors						
13	15	C27,C32,C52,C53,C54,C55,C56, C57,C58,C59,C60,C61,C62,C63, C64	470 nF		100 V capacitor C1206	
14	16	C1,C2,C3,C4,C5,C6,C7,C8,C9, C10,C11,C12,C13,C14,C26,C73	47 nF		100 V capacitor C0603	
15	16	C15,C16,C17,C18,C19,C20,C21, C22,C23,C24,C25,C36,C37,C38, C45,C80	47 nF		50 V capacitor C0402	
16	7	C28,C33,C34,C35,C39,C40,C89	2.2 nF		50 V capacitor C0402	
17	2	C29,C31	220 pF		50 V capacitor C0603	
18	1	C41	220 nF		100V capacitor C0805	
19	1	C44	10 nF		50 V capacitor C0402	
20	1	C46	2.2 µF		6.3 V capacitor C0603	
21	1	C66	6.8 µF		16 V capacitor C0805	
22	4	C68,C69,C70,C71	22 pF		50 V capacitor C0402	(2)
23	2	C72,C93	47 nF		50 V capacitor C0402	(2)
24	7	C74,C75,C76,C77,C78,C79,C88	1 nF		50 V capacitor C0402	
25	1	C87	100 nF		50 V capacitor C0805	
26	4	C91,C92,C94,C95	10 pF		50 V capacitor C0402	
27	1	C96	47 nF		100 V Capacitor C0603	(2)
Resistors						
28	14	R1,R2,R3,R4,R5,R6,R7,R8,R9, R10,R11,R29,R30,R31	39 Ω		Resistor 3/4 W R1210	

Table 7. Bill of materials [(1)]

Item	Qty	Schematic label	Value	Part number	Description	Assy opt.
29	2	R12,R13	127 Ω		Resistor 1/16 W R0402	
30	15	R14,R15,R16,R17,R18,R19,R20, R21,R22,R23,R24,R25,R32,R33, R34	3 KΩ		Resistor 1/16 W R0402	
31	15	R26,R39,R62,R63,R64,R65,R66, R67,R68,R69,R70,R71,R72,R73, R74	2 KΩ		Resistor 1/16 W R0402	
32	13	R27,R28,R35,R36,R37,R38,R46, R47,R49,R50,R77,R104,R112	10 KΩ		Resistor 1/16 W R0402	
33	7	R40,R41,R42,R43,R44,R45,R103	1 KΩ		Resistor 1/16 W R0402	
34	1	R48	100 KΩ		Resistor 1/16 W R0402	
35	1	R52	300 Ω		Resistor 1/10 W R0603	
36	2	R53,R58	10 KΩ		Resistor 1/10 W R0603	
37	1	R78	10 Ω		Resistor 1/10 W R0603	
38	11	R80,R81,R82,R83,R84,R85,R86, R109,R110,R115,R119	0 Ω		Resistor 1/16 W R0402	
39	2	R105,R106	620 Ω		Resistor 1/16 W R0402	(2)
40	4	R107,R108,R117,R118	0 Ω		Resistor 1/8 W R0805	
41	1	R111	0.1 Ω		Resistor 1/5 W R0603	
42	1	R116	0 Ω		Resistor 1/16 W R0402	(2)
43	7	NTC2, NTC3, NTC4, NTC5, NTC6, NTC7, NTC8	10 KΩ	490-6940-6-ND	Thermistor R0402	
Switches, Connectors, Jumpers and Test Points						
44	2	J1,J9		SSQ-108-23-G-D	CON_2X8	
45	1	J2		SSQ-110-23-G-D	CON_2X10	
46	1	J10		SSQ-106-23-G-D	CON_2X6	

Notes
1. NXP does not assume liability, endorse, or warrant components from external manufacturers are referenced in circuit drawings or tables.While NXP offers component recommendations in this configuration, it is the customer's responsibility to validate their application.
2. Do not populate

7 Accessory item bill of materials

Table 8. Accessory Bill of Materials [3]

Item	Qty	Part number	Description
1	1	M50-9101742	34-Pin ribbon cable

Notes

3. NXP does not assume liability, endorse, or warrant components from external manufacturers are referenced in circuit drawings or tables. While NXP offers component recommendations in this configuration, it is the customer's responsibility to validate their application.

8 References

NXP.com Support Pages	Description	URL
MC33771	Product Summary Page	www.nxp.com/MC33771
KIT33771SP1EVB	Tool Summary Page	www.nxp.com/KIT33771SPIEVB
KIT33664AEVB	Tool Summary Page	www.nxp.com/KIT33664AEVB

8.1 Support

Visit www.nxp.com/support for a list of phone numbers within your region.

8.2 Warranty

Visit www.nxp.com/warranty to submit a request for tool warranty.

9 Revision history

Revision	Date	Description of Changes
1.0	3/2016	• Initial release
	5/2016	• Corrected document form and style
2.0	11/2016	• Updated part number for schematic label IC1 in Table 7

How to Reach Us:

Home Page:
NXP.com

Web Support:
http://www.nxp.com/support

Information in this document is provided solely to enable system and software implementers to use NXP products. There are no expressed or implied copyright licenses granted hereunder to design or fabricate any integrated circuits based on the information in this document. NXP reserves the right to make changes without further notice to any products herein.

NXP makes no warranty, representation, or guarantee regarding the suitability of its products for any particular purpose, nor does NXP assume any liability arising out of the application or use of any product or circuit, and specifically disclaims any and all liability, including without limitation, consequential or incidental damages. "Typical" parameters that may be provided in NXP data sheets and/or specifications can and do vary in different applications, and actual performance may vary over time. All operating parameters, including "typicals," must be validated for each customer application by the customer's technical experts. NXP does not convey any license under its patent rights nor the rights of others. NXP sells products pursuant to standard terms and conditions of sale, which can be found at the following address:

http://www.nxp.com/terms-of-use.html.

NXP, the NXP logo, Freescale, the Freescale logo and SMARTMOS are trademarks of NXP B.V. All other product or service names are the property of their respective owners. All rights reserved.

© 2016 NXP B.V.

Document Number: KT33771SPIUG
Rev. 2.0
11/2016